Work Order ID 62311

September 27, 2010 7:54:11 AM

Item ID: D206-667-203 **Accept** **Setup Start**

Revision ID: **Stop**

Item Name: Crosstube Aft

Start Date: 9/27/10 **Start Qty:** 1.00 **Cust Item ID:**

Required Date: 10/15/10 **Req'd Qty:** 1.00 **Customer:**

Reference:

Run Start

Approvals: **Process Plan:** CL **Date:** 10/9/27 **Tooling:** _____ **Date:** _____

Stop

QC: _____ **Date:** _____ **SPC (Y/N):** _____ **Date:** _____

Sequence ID/ Work Center ID	Operation Description	Set Up/ Run Hours	Tool ID	Tool #	Plan Code	Accept Qty	Reject Qty	Reject Number	Insp. Stamp
Draw Nbr	**Revision Nbr**								
D206-667-243	Rev C								
100	DOCUMENT CONTROL	0.00							
DC	**Memo**	0.00							
Document Control	Photocopy bluefile and create labels as per PPP D206-667-203 CHG003								
110	BENDING MACHINE - CROSSTUBES	0.00							
CNC Bend 2	**Memo**	0.00							
CNC Alpha 160 Bender	Bend tube as per Dwg D206-667-243 using CNC bender program 206L-AF								
120	QC15- Crosstube Dimensional Check	0.00							
QC	**Memo**	0.00							
Quality Control									

Hj der BG/11-02-01

DP 11-1-7

Sulo2/01

DP 11-1-7

Sulo2/01

Dart Aerospace Ltd

W/O:		WORK ORDER CHANGES					
DATE	STEP	PROCEDURE CHANGE	By	Date	Qty	Approval Chief Eng / Prod Mgr	Approval QC Inspector

Part No: _____ PAR #: _____ Fault Category: _____ NCR: Yes No DQA: _____ Date: _____

Resolution: _____ Disposition: _____ QA: N/C Closed: _____ Date: _____

NCR:		WORK ORDER NON-CONFORMANCE (NCR)						
DATE	STEP	Description of NC Section A	Corrective Action Section B			Verification Section C	Approval Chief Eng	Approval QC Inspector
			Initial Chief Eng	Action Description Chief Eng	Sign & Date			

NOTE: Date & initial all entries

H:\fFORMS\Quality Assurance\approved QA\NCRWO RevE

Work Order ID 62311

September 27, 2010 7:54:11 AM

Item ID: D206-667-203 **Accept** **Setup Start** **Stop**

Revision ID:

Item Name: Crosstube Aft

Start Date: 9/27/10 **Start Qty:** 1.00 **Cust Item ID:**

Required Date: 10/15/10 **Req'd Qty:** 1.00 **Customer:**

Reference:

Run Start **Stop**

Approvals: **Process Plan:** _____ **Date:** _____ **Tooling:** _____ **Date:** _____

QC: _____ **Date:** _____ **SPC (Y/N):** _____ **Date:** _____

Sequence ID/ Work Center ID	Operation Description	Set Up/ Run Hours	Tool ID	Tool #	Plan Code	Accept Qty	Reject Qty	Reject Number	Insp. Stamp
130	Crosstubes	0.00							
Crosstubes		0.00							
Crosstubes									

Memo

1-Drill pilot holes in tube using drill Jig DT8583 & DT8584 as per Dwg D206-667-243 and drill table DT8577. Locate hole #6 for towers as per QSI 10. Drill all (3) top holes.

2-Drill and Ream all holes in tube to finish size using drill Jig DT8583 & DT8584 as per Dwg D206-667-243 Check dimensions between holes on all four sides.

3-Flip tube and switch drilling Jigs from right to left, left to right. Locate Jigs off existing holes using "T" pins.

4-Drill pilot holes using drill Jig DT8583 & DT8584 as per Dwg D206-667-243. Drill only the top (2) holes.

5-Drill & ream the top (2) holes to finish size using drill Jig DT8583 & DT8584 as per Dwg D206-667-243

6-Drill Fwd rivet holes using drill Jig DT8789FWD as per Dwg D206-667-143.Note: Fwd side has 3x top holes.

7-Drill Aft rivet holes using drill Jig DT8789 as per Dwg D206-667-243.

8-C'sink holes as per Dwg D206-667-243.

9 -Scribe part # and batch # using vibrating stylus as per Dwg D206-667-243 Inside of Cuff(Donot engrave on outside of tube)

10 -Deburr & Inspect for surface damage. Repair damage within limits as per

11-1-11

SAD 10-01-12 (1)

Dart Aerospace Ltd

W/O:		WORK ORDER CHANGES					
DATE	STEP	PROCEDURE CHANGE	By	Date	Qty	Approval Chief Eng / Prod Mgr	Approval QC Inspector

Part No: _____ PAR #: _____ Fault Category: _____ NCR: Yes No DQA: _____ Date: _____

Resolution: _____ Disposition: _____ QA: N/C Closed: _____ Date: _____

NCR:		WORK ORDER NON-CONFORMANCE (NCR)						
DATE	STEP	Description of NC Section A	Corrective Action Section B			Verification Section C	Approval Chief Eng	Approval QC Inspector
			Initial Chief Eng	Action Description Chief Eng	Sign & Date			

NOTE: Date & initial all entries

H:\FORMS\Quality Assurance\approved QA\NCRWO RevE

Work Order ID 62311

September 27, 2010 7:54:11 AM

Item ID: D206-667-203 **Accept** **Setup Start** **Stop**

Revision ID:

Item Name: Crosstube Aft

Start Date: 9/27/10 **Start Qty:** 1.00 **Cust Item ID:**

Required Date: 10/15/10 **Req'd Qty:** 1.00 **Customer:**

Reference:

Run Start **Stop**

Approvals: **Process Plan:** _____ **Date:** _____ **Tooling:** _____ **Date:** _____

QC: _____ **Date:** _____ **SPC (Y/N):** _____ **Date:** _____

Sequence ID/ Work Center ID	Operation Description	Set Up/ Run Hours	Tool ID	Tool #	Plan Code	Accept Qty	Reject Qty	Reject Number	Insp. Stamp
	Dwg D206-667-243								
140	Crosstubes Chemical Conversion	0.00	SAD 10-01-12			1			
HandFXtube	**Memo**	0.00							
Hand Finishing Crosstubes									
150	QC3- Inspect Part Finish	0.00	Initial 12						
QC	**Memo**	0.00							
Quality Control									
160	QC5- Inspect part completeness to step on W/O	0.00	Initial 12			1			
QC	**Memo**	0.00							
Quality Control									

Dart Aerospace Ltd

W/O:		WORK ORDER CHANGES					
DATE	STEP	PROCEDURE CHANGE	By	Date	Qty	Approval Chief Eng / Prod Mgr	Approval QC Inspector

Part No: _____ PAR #: _____ Fault Category: _____ NCR: Yes No DQA: _____ Date: _____

Resolution: _____ Disposition: _____ QA: N/C Closed: _____ Date: _____

NCR:		WORK ORDER NON-CONFORMANCE (NCR)						
DATE	STEP	Description of NC Section A	Corrective Action Section B			Verification Section C	Approval Chief Eng	Approval QC Inspector
			Initial Chief Eng	Action Description Chief Eng	Sign & Date			

NOTE: Date & initial all entries

H:\fFORMS\Quality Assurance\approved QA\NCRWO RevE

Work Order ID 62311

September 27, 2010 7:54:11 AM

Item ID: D206-667-203 **Accept** **Setup** **Start** **Stop**

Revision ID:

Item Name: Crosstube Aft

Start Date: 9/27/10 **Start Qty:** 1.00 **Cust Item ID:**

Required Date: 10/15/10 **Req'd Qty:** 1.00 **Customer:**

Reference:

Approvals: **Process Plan:** _____ **Date:** _____ **Tooling:** _____ **Date:** _____ **Run** **Start** **Stop**

QC: _____ **Date:** _____ **SPC (Y/N):** _____ **Date:** _____

Sequence ID/ Work Center ID	Operation Description	Set Up/ Run Hours	Tool ID	Tool #	Plan Code	Accept Qty	Reject Qty	Reject Number	Insp. Stamp
170	Outsource process - NDT per QSI038 4.1	0.00							
Outsource2	**Memo**	0.00							
Outsource process - NDT	Liquid Penetrant Inspection as per QSI 038Or Issue P/O: 13277 LPI as per ASTM 1417 Level 2 Attach copy of NDT results to work order								
180	Packaging	0.00							
Packaging	**Memo**	0.00							
Packaging	Ensure copy of NDT results attached to work order.								
190	QC5- Inspect part completeness to step on W/O	0.00							
QC	**Memo**	0.00							
Quality Control	Ensure results are as per Dwg D206-667-243								

CL 11/01/13 (1)

11/01/13 (1)

11 01 14 (1)

Dart Aerospace Ltd

W/O:		WORK ORDER CHANGES					
DATE	STEP	PROCEDURE CHANGE	By	Date	Qty	Approval Chief Eng / Prod Mgr	Approval QC Inspector

Part No: _____ PAR #: _____ Fault Category: _____ NCR: Yes No DQA: _____ Date: _____

Resolution: _____ Disposition: _____ QA: N/C Closed: _____ Date: _____

NCR:		WORK ORDER NON-CONFORMANCE (NCR)						
DATE	STEP	Description of NC Section A	Corrective Action Section B			Verification Section C	Approval Chief Eng	Approval QC Inspector
			Initial Chief Eng	Action Description Chief Eng	Sign & Date			

NOTE: Date & initial all entries

H:\FORMS\Quality Assurance\approved QA\NCRWO RevE

Work Order ID 62311

September 27, 2010 7:54:11 AM

Item ID: D206-667-203 **Accept** **Setup Start** **Stop**

Revision ID:

Item Name: Crosstube Aft

Start Date: 9/27/10 **Start Qty:** 1.00 **Cust Item ID:**

Required Date: 10/15/10 **Req'd Qty:** 1.00 **Customer:**

Reference:

Run Start **Stop**

Approvals: **Process Plan:** _____ **Date:** _____ **Tooling:** _____ **Date:** _____

QC: _____ **Date:** _____ **SPC (Y/N):** _____ **Date:** _____

Sequence ID/ Work Center ID	Operation Description	Set Up/ Run Hours	Tool ID	Tool #	Plan Code	Accept Qty	Reject Qty	Reject Number	Insp. Stamp
200	SprayPaint	0.00							
SprayPaint									
Spray Painting	**Memo**	0.00							
	1-Prime inside and outside crosstube as per QSI 005 4.2 2-Paint outside crosstube with White Imron as per QSI 005 4.2 PRIME: Start Time: 7:00 Fininsh Time: 7:30 PAINT: Start Time: 11:30 Finish Time: 12:30								
210	QC14- Inspect Spray Paint	0.00							
QC									
Quality Control	**Memo**	0.00							
	Wrap in plastic bag to protect from scratches								

Accept Qty: 11 · Reject Qty: 01 · Reject Number: 14 · Insp. Stamp: 1

Reject Qty: 10

Dart Aerospace Ltd

W/O:		WORK ORDER CHANGES					
DATE	STEP	PROCEDURE CHANGE	By	Date	Qty	Approval Chief Eng / Prod Mgr	Approval QC Inspector

Part No: _____ PAR #: _____ Fault Category: _____ NCR: Yes No DQA: _____ Date: _____

Resolution: _____ Disposition: _____ QA: N/C Closed: _____ Date: _____

NCR:		WORK ORDER NON-CONFORMANCE (NCR)						
DATE	STEP	Description of NC Section A	Corrective Action Section B			Verification Section C	Approval Chief Eng	Approval QC Inspector
			Initial Chief Eng	Action Description Chief Eng	Sign & Date			

NOTE: Date & initial all entries

H:\fFORMS\Quality Assurance\approved QA\NCRWO RevE

Work Order ID 62311

September 27, 2010 7:54:11 AM

Item ID: D206-667-203 **Accept** **Setup Start**

Revision ID: **Stop**

Item Name: Crosstube Aft

Start Date: 9/27/10 **Start Qty:** 1.00 **Cust Item ID:**

Required Date: 10/15/10 **Req'd Qty:** 1.00 **Customer:**

Reference:

Run Start

Stop

Approvals: **Process Plan:** _____ **Date:** _____ **Tooling:** _____ **Date:** _____

QC: _____ **Date:** _____ **SPC (Y/N):** _____ **Date:** _____

Sequence ID/ Work Center ID	Operation Description	Set Up/ Run Hours	Tool ID	Tool #	Plan Code	Accept Qty	Reject Qty	Reject Number	Insp. Stamp
220		0.00							
Crosstubes	Crosstubes					ML	11	01	19 (i)
Crosstubes	**Memo**	0.00							
Crosstubes	1-Install nut plates as per Dwg D206-667-243.								
230		0.00							
Crosstubes	Skidtubes					ML	11	01	19 (i)
Crosstubes	**Memo**	0.00							
Crosstubes	1-Install support using 0.03" to 0.06" thick layer of magnobond 6398 per QSI 015. Let cure for 12h after installation and prior to packaging. Note: (3) top holes should be facing up. A/R Magnobond 6398 : #16227 exp: 08/2011 2-Install supports and clamps as per Dwg D206-667-243. Torque clamps to 80-100 in lb ML 11.01.25								

Dart Aerospace Ltd

W/O:		WORK ORDER CHANGES					
DATE	STEP	PROCEDURE CHANGE	By	Date	Qty	Approval Chief Eng / Prod Mgr	Approval QC Inspector

Part No: _____ PAR #: _____ Fault Category: _____ NCR: Yes No DQA: _____ Date: _____

Resolution: _____ Disposition: _____ QA: N/C Closed: _____ Date: _____

NCR:		WORK ORDER NON-CONFORMANCE (NCR)						
DATE	STEP	Description of NC Section A	Corrective Action Section B			Verification Section C	Approval Chief Eng	Approval QC Inspector
			Initial Chief Eng	Action Description Chief Eng	Sign & Date			

NOTE: Date & initial all entries

H:\fFORMS\Quality Assurance\approved QA\NCRWO RevE

Work Order ID 62311

September 27, 2010 7:54:11 AM

Item ID: D206-667-203 **Accept** **Setup** **Start** **Stop**

Revision ID:

Item Name: Crosstube Aft

Start Date: 9/27/10 **Start Qty:** 1.00 **Cust Item ID:**

Required Date: 10/15/10 **Req'd Qty:** 1.00 **Customer:**

Reference:

Run **Start** **Stop**

Approvals: **Process Plan:** _____ **Date:** _____ **Tooling:** _____ **Date:** _____

QC: _____ **Date:** _____ **SPC (Y/N):** _____ **Date:** _____

Sequence ID/ Work Center ID	Operation Description	Set Up/ Run Hours	Tool ID	Tool #	Plan Code	Accept Qty	Reject Qty	Reject Number	Insp. Stamp
240	QC5- Inspect part completeness to step on W/O	0.00							
QC	Memo	0.00 8/10/01				(70)			
Quality Control									
250	Pick Kit	0.00							
Packaging	Memo	0.00				11/21/01			
Packaging									
260	QC4- 100% Inspect kits for completeness	0.00							
QC	Memo	0.00 8/10/01				(71)			
Quality Control									

Dart Aerospace Ltd

W/O:		WORK ORDER CHANGES					
DATE	STEP	PROCEDURE CHANGE	By	Date	Qty	Approval Chief Eng / Prod Mgr	Approval QC Inspector

Part No: _____ PAR #: _____ Fault Category: _____ NCR: Yes No DQA: _____ Date: _____

Resolution: _____ Disposition: _____ QA: N/C Closed: _____ Date: _____

NCR:		WORK ORDER NON-CONFORMANCE (NCR)						
DATE	STEP	Description of NC Section A	Corrective Action Section B			Verification Section C	Approval Chief Eng	Approval QC Inspector
			Initial Chief Eng	Action Description Chief Eng	Sign & Date			

NOTE: Date & initial all entries

H:\FORMS\Quality Assurance\approved QA\NCRWO RevE

Work Order ID 62311

September 27, 2010 7:54:11 AM

Item ID: D206-667-203 **Accept** **Setup Start**

Revision ID:

Item Name: Crosstube Aft **Stop**

Start Date: 9/27/10 **Start Qty:** 1.00 **Cust Item ID:**

Required Date: 10/15/10 **Req'd Qty:** 1.00 **Customer:**

Reference:

Run Start

Approvals: **Process Plan:** _____ **Date:** _____ **Tooling:** _____ **Date:** _____

Stop

QC: _____ **Date:** _____ **SPC (Y/N):** _____ **Date:** _____

Sequence ID/ Work Center ID	Operation Description	Set Up/ Run Hours	Tool ID	Tool #	Plan Code	Accept Qty	Reject Qty	Reject Number	Insp. Stamp
270		0.00							
Packaging	Packaging					11/2/18			
Packaging	**Memo**	0.00							
Packaging	Identify and pack for shipping as per PPP D206-667-203 Location: 53 PPP Rev: D								
280	QC21- Final Inspection - Work Order Release	0.00					11/02/02		
QC	**Memo**	0.00							
Quality Control							CMF 11-02-01		

Dart Aerospace Ltd

W/O:		WORK ORDER CHANGES					
DATE	STEP	PROCEDURE CHANGE	By	Date	Qty	Approval Chief Eng / Prod Mgr	Approval QC Inspector

Part No: _____ PAR #: _____ Fault Category: _____ NCR: Yes No DQA: _____ Date: _____

Resolution: _____ Disposition: _____ QA: N/C Closed: _____ Date: _____

NCR:		WORK ORDER NON-CONFORMANCE (NCR)						
DATE	STEP	Description of NC Section A	Corrective Action Section B			Verification Section C	Approval Chief Eng	Approval QC Inspector
			Initial Chief Eng	Action Description Chief Eng	Sign & Date			

NOTE: Date & initial all entries

H:\fFORMS\Quality Assurance\approved QA\NCRWO RevE

Picklist Print

September 27, 2010 7:54:10 AM

4

Work Order ID: 62311

Parent Item: D206-667-203

Parent Item Name: Crosstube Aft

Start Date: 9/27/10 **Required Date:** 10/15/10

Start Qty: 1.00 **Required Qty:** 1.00

Comments:
IPP Rev:F□05.09.01□Add holes for compatibility with Bell Skidtubes□KJ/JLM
IPP Rev:G 08-06-03 update as per DSI9415 (ECN1198) DD verified by:ec
IPP Rev:H 08-07-18 remove thread masking in step 12 DD verified by:EC
IPP Rev:I 08-12-15 add magnobond DD verified by:EC
IPP Rev J 09.01.06 ECN 08-562 EC verified by:DD

Component Item ID/ Item Name	Replacement Item ID	Mfg/ Purch	Bin Item	Primary Location	Last Location	Route Seq ID	Unit of Measure	Qty on Hand	Qty per Kit	Total Qty	Qty Issued	Date Issued	Status
D206-667-203TRN Crosstube Turning Detail		Manufactured	No			220	Each	2.0000	1	1			

Location	Loc Qty	Loc Code
LG	2	
61983	1	
62029	1	

B63930

11-1-7

D2873-043 Nut Plate Assembly		Manufactured	No			220	Each	32.0000	2	2			

11-01-19

Location	Loc Qty	Loc Code
LG	12	
57337	12	
ST	20	
60981	20	

B# 63497

D2873-045 Nut Plate Assembly		Manufactured	No			220	Each	28.0000	2	2			

11-01-19

Location	Loc Qty	Loc Code
LG	28	
57336	8	
60982	20	

B# 63498

Dart Aerospace Ltd

W/O:		WORK ORDER CHANGES					
DATE	STEP	PROCEDURE CHANGE	By	Date	Qty	Approval Chief Eng / Prod Mgr	Approval QC Inspector

Part No: _____ PAR #: _____ Fault Category: _____ NCR: Yes No DQA: _____ Date: _____

Resolution: _____ Disposition: _____ QA: N/C Closed: _____ Date: _____

NCR:		WORK ORDER NON-CONFORMANCE (NCR)						
DATE	STEP	Description of NC Section A	Corrective Action Section B			Verification Section C	Approval Chief Eng	Approval QC Inspector
			Initial Chief Eng	Action Description Chief Eng	Sign & Date			

NOTE: Date & initial all entries

H:\fFORMS\Quality Assurance\approved QA\NCRWO RevE

Picklist Print

September 27, 2010 7:54:10 AM

Work Order ID: 62311

Parent Item: D206-667-203

Parent Item Name: Crosstube Aft

Start Date: 9/27/10 **Required Date:** 10/15/10

Start Qty: 1.00 **Required Qty:** 1.00

D2892-1	Manufactured	No	230	Each	44.0000	2	2	11 01 19
Support								

Location	Loc Qty	Loc Code
LG	44	
41986	12	
42785	20	
53124	8	
55787	1	
61631	3	

D3595-063-450	Manufactured	No	230	Each	123.6590	4	4	11.01.19
RUBBER CUSHION								

B# 64171

Location	Loc Qty	Loc Code
LG	123.6589737	
53775	5.97897368	
58161	3.56	
59580	10.12	
60983	25	
61465	79	

MS20601-AD4W10	Purchased	No	230	Each	116.0000	14	14	11.01.19
RIVET								

B# 116186

Location	Loc Qty	Loc Code
LG051	102	
114245	2	
115405	100	
ST322	14	
113220	14	

Dart Aerospace Ltd

W/O:		WORK ORDER CHANGES					
DATE	STEP	PROCEDURE CHANGE	By	Date	Qty	Approval Chief Eng / Prod Mgr	Approval QC Inspector

Part No: _____ PAR #: _____ Fault Category: _____ NCR: Yes No DQA: _____ Date: _____

Resolution: _____ Disposition: _____ QA: N/C Closed: _____ Date: _____

NCR:		WORK ORDER NON-CONFORMANCE (NCR)						
DATE	STEP	Description of NC Section A	Corrective Action Section B			Verification Section C	Approval Chief Eng	Approval QC Inspector
			Initial Chief Eng	Action Description Chief Eng	Sign & Date			

NOTE: Date & initial all entries

H:\FORMS\Quality Assurance\approved QA\NCRWO RevE

Picklist Print

September 27, 2010 7:54:10 AM

Work Order ID: 62311

Parent Item: D206-667-203

Parent Item Name: Crosstube Aft

Start Date: 9/27/10 **Required Date:** 10/15/10

Start Qty: 1.00 **Required Qty:** 1.00

MS21920-22 Clamp(per MIL-DTL-8783C)	Purchased	No	230	Each	86.0000	4	4	11·01·19

Location	Loc Qty	Loc Code
LG	86	
114077	86	

5 AN5-10A Bolt	Purchased	No	250	Each	372.0000	10	10	11/2/1

Location	Loc Qty	Loc Code
ST337	372	
115108	85	
115429	50	
115589	100	
115700	137	10

6 AN5-32A Bolt	Purchased	No	250	Each	332.0000	4	4	11/2/1

Location	Loc Qty	Loc Code
ST340	332	
114056	72	
114405	50	
115016	50	
115108	50	
115589	60	
115698	50	4

Dart Aerospace Ltd

W/O:		WORK ORDER CHANGES					
DATE	STEP	PROCEDURE CHANGE	By	Date	Qty	Approval Chief Eng / Prod Mgr	Approval QC Inspector

Part No: _____ PAR #: _____ Fault Category: _____ NCR: Yes No DQA: _____ Date: _____

Resolution: _____ Disposition: _____ QA: N/C Closed: _____ Date: _____

NCR:		WORK ORDER NON-CONFORMANCE (NCR)						
DATE	STEP	Description of NC Section A	Corrective Action Section B			Verification Section C	Approval Chief Eng	Approval QC Inspector
			Initial Chief Eng	Action Description Chief Eng	Sign & Date			

NOTE: Date & initial all entries

Picklist Print

September 27, 2010 7:54:10 AM

Work Order ID: 62311

Parent Item: D206-667-203

Parent Item Name: Crosstube Aft

Start Date: 9/27/10 **Required Date:** 10/15/10

Start Qty: 1.00 **Required Qty:** 1.00

AN5-34A Bolt		Purchased	No	250	Each	72.0000	4	4	11/2/1 M116/91

Location	Loc Qty	Loc Code
ST340	72	
113149	22	
113226	50	

AN960JD516 Washer	NAS1149D0563J	Purchased	No	250	Each	34.0000	18	18	11/2/1

Location	Loc Qty	Loc Code
ST	34	
103694	18	
107534	12	
109287	4	

MS21042L5 Nut		Purchased	No	250	Each	957.0000	4	4	11/2/1 SP

Location	Loc Qty	Loc Code
ST139	26	
114813	26	
ST300	931	
115156	431	
115594	500	Y

Dart Aerospace Ltd

W/O:		WORK ORDER CHANGES					
DATE	STEP	PROCEDURE CHANGE	By	Date	Qty	Approval Chief Eng / Prod Mgr	Approval QC Inspector

Part No: _____ PAR #: _____ Fault Category: _____ NCR: Yes No DQA: _____ Date: _____

Resolution: _____ Disposition: _____ QA: N/C Closed: _____ Date: _____

NCR:		WORK ORDER NON-CONFORMANCE (NCR)						
DATE	STEP	Description of NC Section A	Corrective Action Section B			Verification Section C	Approval Chief Eng	Approval QC Inspector
			Initial Chief Eng	Action Description Chief Eng	Sign & Date			

NOTE: Date & initial all entries

H:\fFORMS\Quality Assurance\approved QA\NCRWO RevE

CL 10/9/27
W/O: 62311

Item	Qty -243	Part Number	Description
1	X	D206-667-243	CROSSTUBE ASSEMBLY (206L HIGH AFT)
2	1	D6004-115	CROSSTUBE
3	2	D2873-043	NUT PLATE
4	2	D2873-045	NUT PLATE
5	2	D2892-1	SUPPORT
6	4	D3595-063-450	RUBBER CUSHION
7	4	MS21920-22	CLAMP
8	14	MS20601AD4W10	RIVET (OR NAS9302B-4-10)
9	A/R	MAGNOBOND 6398	ROCKWELL SPECIFICATION RBO-120-023 ADHESIVE (TEXTRON/BELL SPEC. 299-947-100, TYPE II, CLASS 2 ADHESIVE)

GENERAL NOTES:

1) MATERIAL: MANUFACTURED FROM D6004-115
   FINISHED LENGTH = 104.91±0.020
2) FINISH: CHEMICAL CONVERSION COAT PER DART QSI 005 4.1
   PRIME INSIDE AND OUTSIDE PER DART QSI 005 4.2
   PAINT OUTSIDE PER DART QSI 005 4.2
3) TOLERANCES ARE PER DART QSI 018 UNLESS OTHERWISE NOTED.
4) UNITS: INCHES UNLESS OTHERWISE NOTED.
5) BREAK SHARP EDGES: 0.005 TO 0.010 MAX.
6) IDENTIFICATION: SCRIBE DART PART NUMBER "D206-667-243" AND BATCH NUMBER ON INSIDE OF CUFF USING VIBRATING STYLUS.
7) WEIGHT: 21.9 lbs
8) PART IS SYMMETRIC ABOUT CENTERLINE.
9) RUN CUTTER OFF PART WHERE INDICATED. BLEND OUT EDGE LONGITUDINALLY, TRANSITION SHOULD BE SMOOTH.
10) BEND PROGRESSIVELY WITH A MINIMUM OF 8 PASSES. MAXIMUM TUBE FLATTENING DUE TO BENDING IS 6% BASED ON O.D.
11) LIQUID PENETRANT INSPECT OUTSIDE SURFACE OF CROSSTUBE PER QSI 038.
12) INSTALL D2892-1 SUPPORT USING 0.03" TO 0.06" THICK LAYER OF MAGNOBOND 6398 PER QSI 015. LET CURE FOR 12 HOURS AFTER INSTALLATION AND PRIOR TO PACKAGING.
13) INSTALL MS21920-22 CLAMPS WITH D3595-063-450 RUBBER CUSHIONS TO SECURE THE D2892-1 SUPPORT ON TOP SIDE OF THE CROSSTUBE. ENSURE CLAMP MECHANISMS ARE LOCATED ON CROSSTUBE SUPPORTS.
14) EXTREME CARE MUST BE TAKEN TO PROTECT THE OUTSIDE SURFACE OF THE TUBE. THE OUTSIDE SURFACE MUST BE SMOOTH AND FREE FROM SURFACE DEFECTS SUCH AS SCRATCHES, NICKS, OR DENTS. DEFECTS UP TO 0.005" MAY BE BLENDED OUT LONGITUDINALLY. CIRCUMFERENTIAL GRIND MARKS ARE UNACCEPTABLE.
15) TORQUE CLAMPS 80 TO 100 IN-LB. ENSURE AT LEAST 1.5 THREADS ARE SHOWING IN SAFETY AND THAT NUT HAS NOT BOTTOMED-OUT AFTER TORQUING.

RELEASED 08/11/06

REV.	DESCRIPTION	BY	DATE
C	REVISE GENERAL NOTES/PART LIST (ZN D7-1); REORGANIZED VIEWS AND REFORMATTED DRAWING TO CURRENT STANDARDS. D3595-063-450 WAS D2856-400-773 (ZN D6-2 & A5-2); REMOVED REF. & ADD TOLERANCES (ZN 4-3, C5-3, D3-3); RELOCATED FLAG #6 (ZN A8-3) PER NCR 210; MOVED TURNING DETAIL & UPDATED TOLERANCE TO SHEET 4.	RF	08.11.06
B	ADD HOLES AND NUT PLATES FOR COMPATABILITY WITH BHT/AA SKUDTUBES	PH	05.07.26
A	NEW ISSUE	CP	00.11.17

DESIGN		**DART AEROSPACE LTD** HAWKESBURY, ONTARIO, CANADA	
DRAWN	RF		
CHECKED		DRAWING NO.	REV. C
MFG. APPR.		D206-667-243	SHEET 1 OF 4
APPROVED		TITLE	SCALE
DE APPR.		CROSSTUBE ASS'Y (206L HIGH AFT)	NTS
DATE	08.11.06		

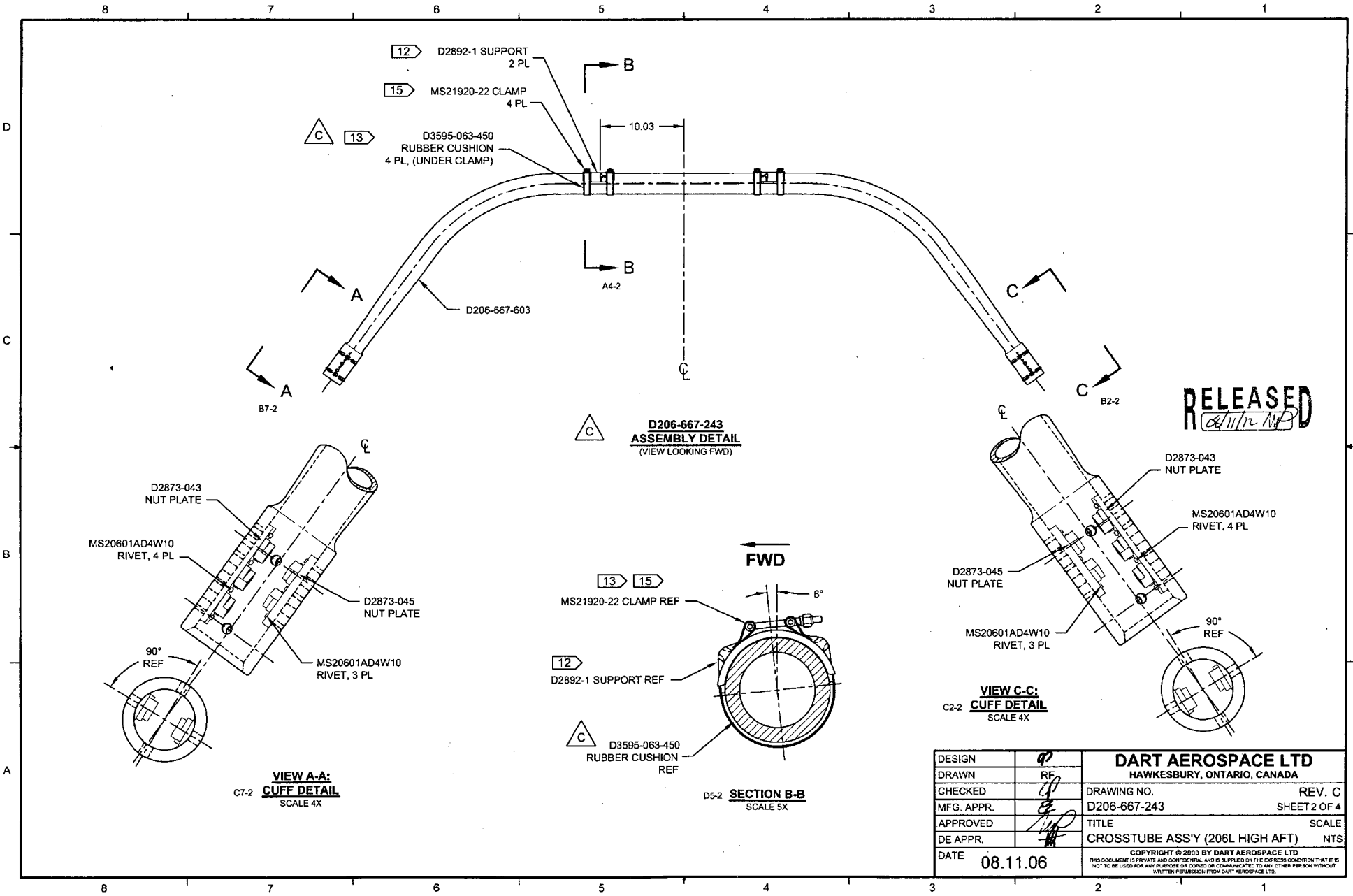

DESIGN		DART AEROSPACE LTD HAWKESBURY, ONTARIO, CANADA
DRAWN	RF	
CHECKED		DRAWING NO. D206-667-243 — REV. C — SHEET 2 OF 4
MFG. APPR.		
APPROVED		TITLE: CROSSTUBE ASS'Y (206L HIGH AFT) — SCALE: NTS
DE APPR.		
DATE	08.11.06	

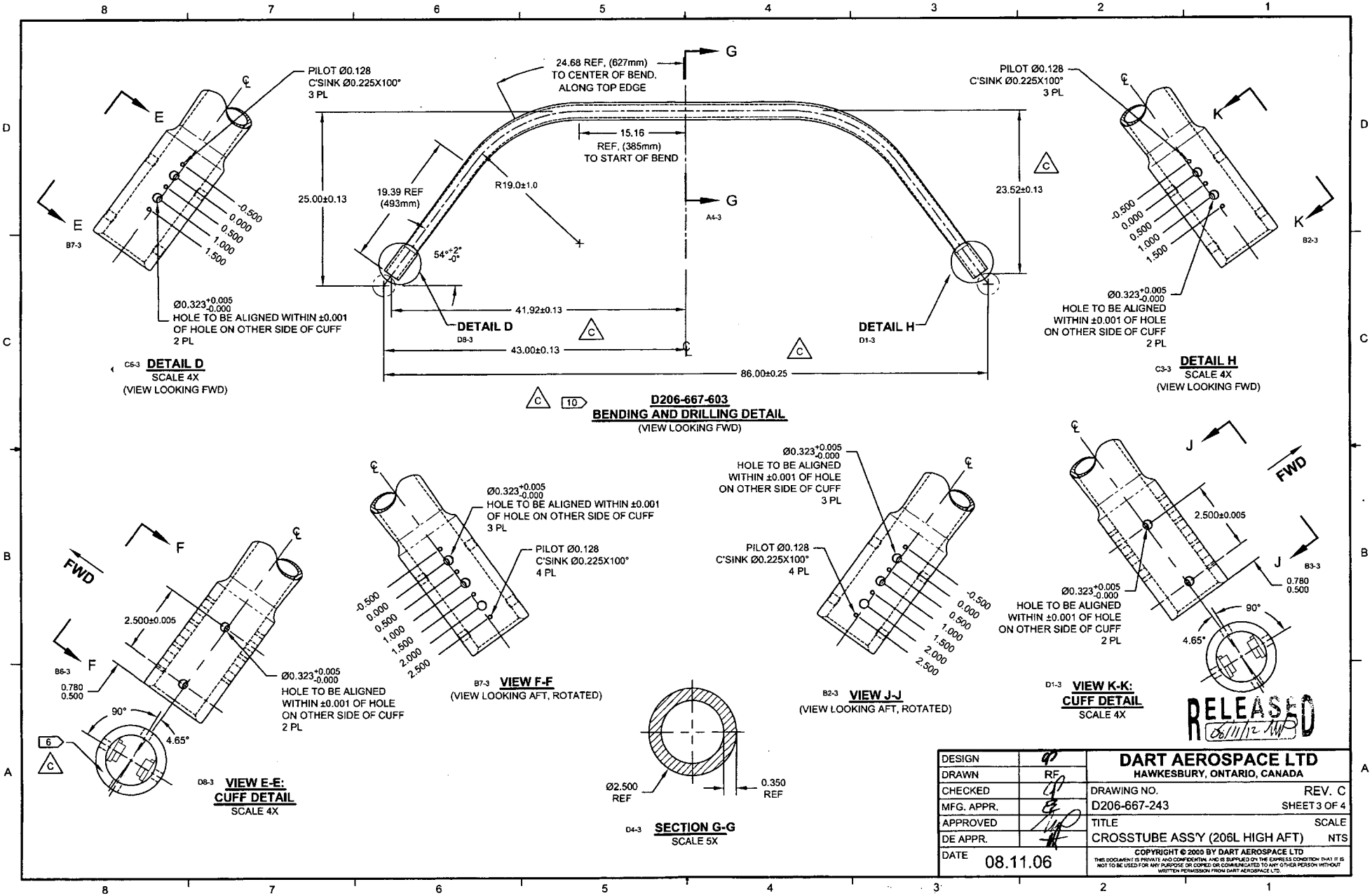
PILOT Ø0.128
C'SINK Ø0.225X100°
3 PL
24.68 REF, (627mm)
TO CENTER OF BEND,
ALONG TOP EDGE
15.16
REF, (385mm)
TO START OF BEND
25.00±0.13
19.39 REF
(493mm)
R19.0±1.0
54°+2° -0°
23.52±0.13
41.92±0.13
43.00±0.13
86.00±0.25
-0.500
0.000
0.500
1.000
1.500
Ø0.323+0.005 -0.000
HOLE TO BE ALIGNED WITHIN ±0.001
OF HOLE ON OTHER SIDE OF CUFF
2 PL
DETAIL D
D8-3
DETAIL H
D1-3
C6-3 DETAIL D
SCALE 4X
(VIEW LOOKING FWD)
C3-3 DETAIL H
SCALE 4X
(VIEW LOOKING FWD)
D206-667-603
BENDING AND DRILLING DETAIL
(VIEW LOOKING FWD)
FWD
2.500±0.005
0.780
0.500
90°
4.65°
D8-3 VIEW E-E:
CUFF DETAIL
SCALE 4X
Ø0.323+0.005 -0.000
HOLE TO BE ALIGNED WITHIN ±0.001
OF HOLE ON OTHER SIDE OF CUFF
3 PL
PILOT Ø0.128
C'SINK Ø0.225X100°
4 PL
-0.500
0.000
0.500
1.000
1.500
2.000
2.500
B7-3 VIEW F-F
(VIEW LOOKING AFT, ROTATED)
Ø0.323+0.005 -0.000
HOLE TO BE ALIGNED
WITHIN ±0.001 OF HOLE
ON OTHER SIDE OF CUFF
2 PL
B2-3 VIEW J-J
(VIEW LOOKING AFT, ROTATED)
D1-3 VIEW K-K:
CUFF DETAIL
SCALE 4X
Ø2.500
REF
0.350
REF
D4-3 SECTION G-G
SCALE 5X
RELEASED
08/11/12
DESIGN
DRAWN RF
CHECKED
MFG. APPR.
APPROVED
DE APPR.
DATE 08.11.06
DART AEROSPACE LTD
HAWKESBURY, ONTARIO, CANADA
DRAWING NO. D206-667-243
REV. C
SHEET 3 OF 4
TITLE CROSSTUBE ASS'Y (206L HIGH AFT)
SCALE NTS
COPYRIGHT © 2000 BY DART AEROSPACE LTD
THIS DOCUMENT IS PRIVATE AND CONFIDENTIAL AND IS SUPPLIED ON THE EXPRESS CONDITION THAT IT IS NOT TO BE USED FOR ANY PURPOSE OR COPIED OR COMMUNICATED TO ANY OTHER PERSON WITHOUT WRITTEN PERMISSION FROM DART AEROSPACE LTD.

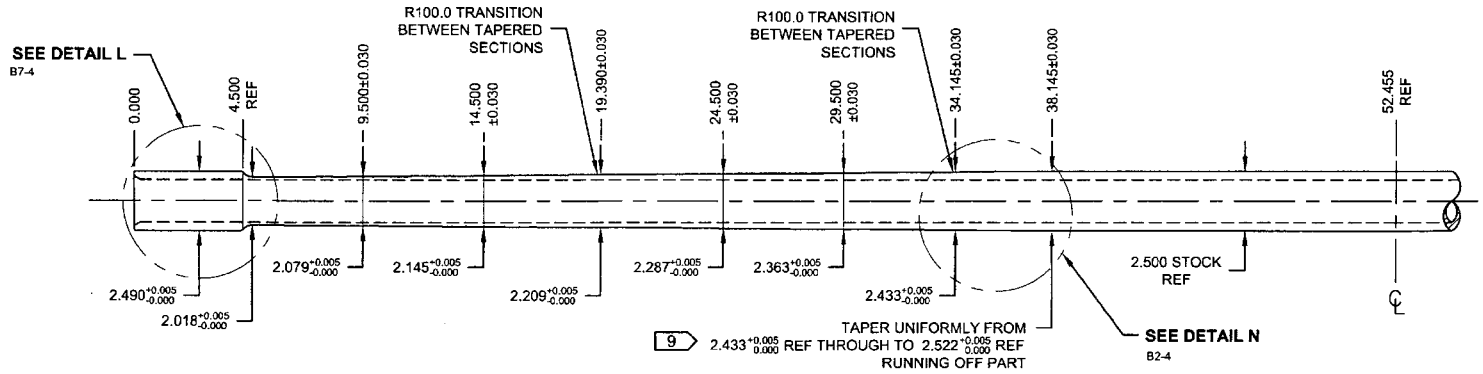

C TURNING DETAIL

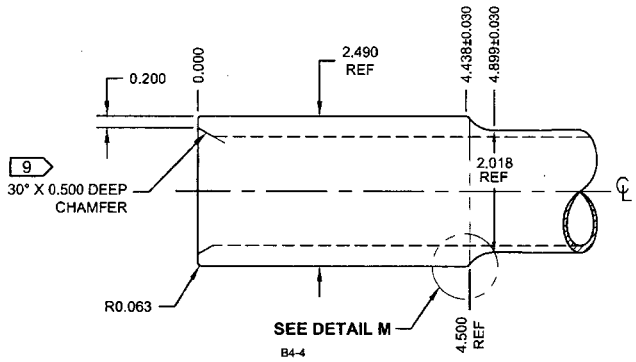

C7-4 **DETAIL L: CROSSTUBE CUFF**
NOT TO SCALE

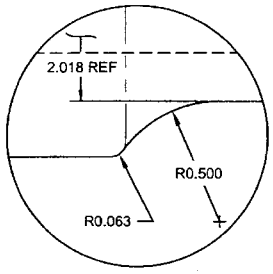

B6-4 **DETAIL M: CUFF TRANSITION**
NOT TO SCALE

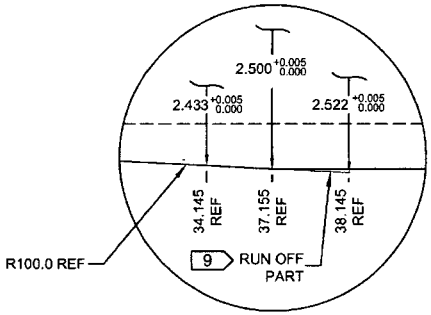

C4-4 **DETAIL N: TAPER RUN-OFF**
NOT TO SCALE

RELEASED 08/11/12

DESIGN		**DART AEROSPACE LTD** HAWKESBURY, ONTARIO, CANADA
DRAWN	RF	
CHECKED		DRAWING NO. REV. C
MFG. APPR.		D206-667-243 SHEET 4 OF 4
APPROVED		TITLE SCALE
DE APPR.		CROSSTUBE ASS'Y (206L HIGH AFT) NTS
DATE	08.11.06	

DART AEROSPACE LTD	Work Order:	62311
Description: Crosstube High Aft (206L)	**Part Number:**	**D206-667-203**
Inspection Dwg: D206-667-243 **Rev:** C		**Page 1 of 1**

Required Dimension	Min	Max
Height	23.39	23.65
1/2 Span	41.79	42.05
Angle	54	56
Total Span	83.58	84.1

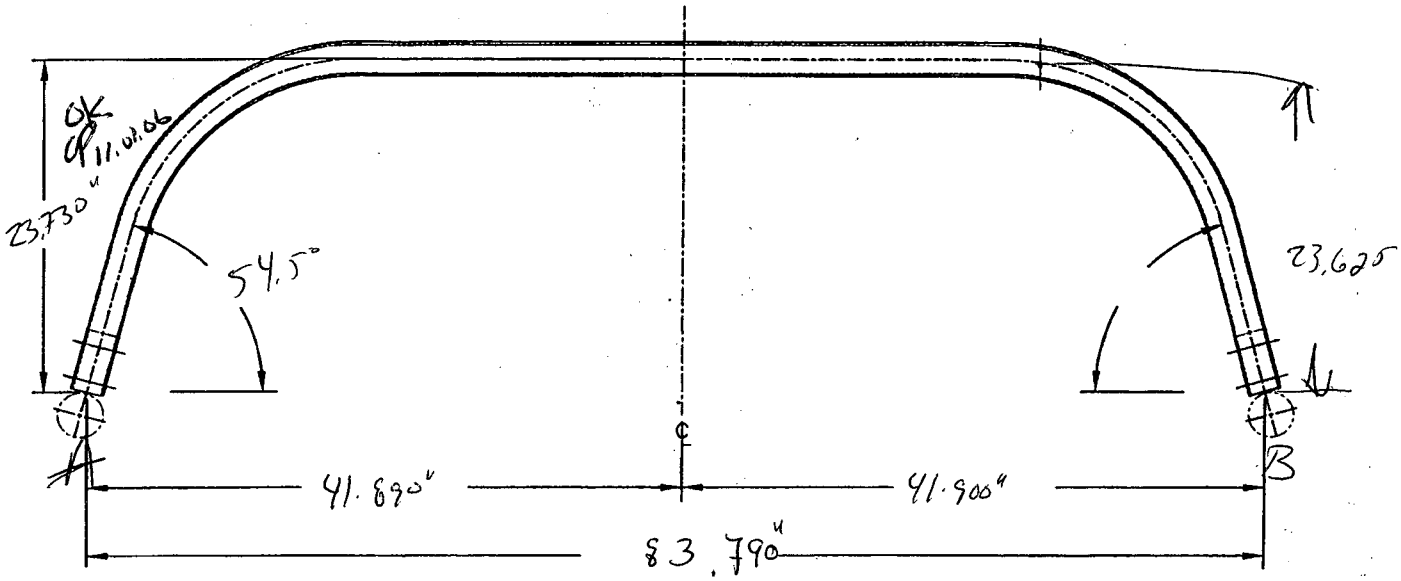

Comments
High on one side. Acceptable
11.01.06 / QSI 042

QC15 Inspection	
Date	11.01.06

Rev	Date	Change	Revised by	Approved
A	07.02.06	New Issue	KJ/JM	
B	09.11.17	Dwg Rev updated	KJ	
C	09.12.14	Dimensions update per Dwg Rev C	KJ	

Dart Aerospace Ltd

W/O:		WORK ORDER CHANGES					
DATE	STEP	PROCEDURE CHANGE	By	Date	Qty	Approval Chief Eng / Prod Mgr	Approval QC Inspector

Part No: _____ **PAR #:** _____ **Fault Category:** _____ **NCR:** Yes No **DQA:** _____ **Date:** _____

Resolution: _____ **Disposition:** _____ **QA: N/C Closed:** _____ **Date:** _____

NCR:		WORK ORDER NON-CONFORMANCE (NCR)						
DATE	STEP	Description of NC Section A	Corrective Action Section B			Verification Section C	Approval Chief Eng	Approval QC Inspector
			Initial Chief Eng	Action Description Chief Eng	Sign & Date			

NOTE: Date & initial all entries

H:\fFORMS\Quality Assurance\approved QA\NCRWO RevE

ACUREN

LIQUID PENETRANT TEST REPORT

P- 05494

PAGE 1 OF 1

CLIENT: DART AEROSPACE
ATTENTION: LINDA LADELLE/CHANTALE/JAN
ADDRESS: 1270, ABERDEN, HAWKESBURY, ON

DATE: JAN/13/2011 TIME: AM ☑ PM ☐
ACUREN JOB NO.: 188-11-2012
PO/WO NO.: 13277
WORK LOCATION: AS ADDRESS
ACCEPTANCE STD.: ASTM 1417/QSE-038 REV./DATE: 2005

PROJECT: F.P.I. ON 4 "CROSS-TUBES"
ITEM(S) EXAMINED: SEE BELOW

JOB DESCRIPTION

PROCEDURE NO. LT002 REV./DATE 2008 TECHNIQUE NO. LT002 REV./DATE 2008

PART NO.: MATERIAL: ALODINE ALUMINIUM THICKNESS: N/A

SCOPE: PERFORMED A WET-FLUORESCENT-LIQUID PENETRANT INSPECTION ON 100% OF THE EXTERNAL SURFACE

TEST DETAILS

METHOD: ☑ FLUORESCENT ☐ VISIBLE
FAMILY BRAND: MAGNAFLUX
PENETRANT: ZL-67 MINIMUM DWELL TIME: 10 MIN.
PENETRANT REMOVER: H_2O MINIMUM DRY TIME: >10 MIN.
DEVELOPER: SKD-S2 MINIMUM DWELL TIME: 10 MIN.
DEVELOPER TYPE: ☑ NON AQUEOUS ☐ AQUEOUS ☐ DRY

☑ WATER WASH ☐ SOLVENT REMOVABLE ☐ POST EMULSIFIED
BLACK LIGHT S/N: 13798 ☑ OUTPUT > 1000 μ W/CM² ☑ AMBIENT < 2 fc
LIGHTING EQUIP. ☐ FLASHLIGHT ☐ TROUBLELIGHT ☐ OUTPUT>100 fc @ SURFACE
OTHER
LIGHT METER S/N: CAL DUE DATE: FEB-05-2011

TEST SURFACE

SURFACE CONDITION: ☐ AS GROUND ☐ AS WELDED ☐ MACHINED ☐ SHOT BLASTED ☑ CLEAN BARE METAL
SURFACE TEMPERATURE: ☐ < - 4°C/ 20°F ☐ - 4°C/ 20°F TO 10°C/50°F ☑ 10°C/50°F TO 52°C/125°F ☐ > 52°C/125°F

RESULTS- (☐ METRIC ☑ IMPERIAL)

ITEM	COMMENTS	ACCEPT	REJECT
	- WET-FLUO L.P.I. ON 100% EXT. SURFACE -		
1	CROSS TUBE W.O. ID 63987	✓	
2	CROSS TUBE W.O. ID 63988	✓	
3	CROSS TUBE W.O. ID 62311	✓	
4	CROSS TUBE W.O. ID 62312	✓	

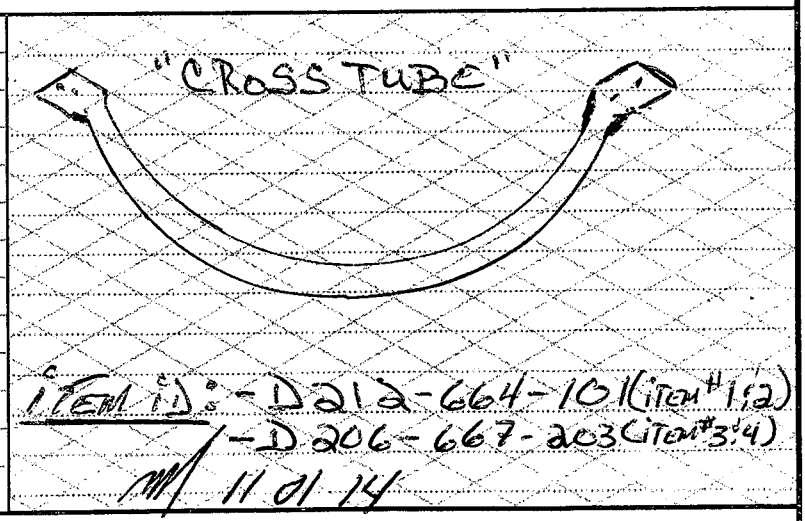

NO REJECTABLE INDICATION WAS DETECTED AS PER APPLICABLE STANDARD

Scope of Services
The agreement of Acuren Group Inc. to perform services extends only to those services provided for in writing. Under no circumstances shall such services extend beyond the performance of the requested services. It is expressly understood that all descriptions, comments and expressions of opinion reflect the opinions or observations of Acuren Group Inc. based on information and assumptions supplied by the owner/operator and are not intended nor can they be construed as representations or warranties. Acuren Group Inc. is not assuming any responsibilities of the owner/operator and the owner/operator retains complete responsibility for the engineering, manufacture, repair and use decisions as a result of the data or other information provided by Acuren Group Inc. In no event shall Acuren Group Inc.'s liability in respect of the services referred to herein exceed the amount paid for such services.
Standard of Care
In performing the services provided, Acuren Group Inc. uses the degree, care and skill ordinarily exercised under similar circumstances by others performing such services in the same or similar locality. No other warranty, expressed or implied, is made or intended by Acuren Group Inc.

SIGNATURES

CLIENT REPRESENTATIVE: Tara Tithay (PRINT) — (SIGNATURE)
TECHNICIAN (SIGNATURE):
NAME (PRINT): YVES DESROSIERS
1ST TECHNICIAN — 2ND TECHNICIAN
CGSB LEVEL 2 SNT LEVEL 2 — CGSB LEVEL — SNT LEVEL —
CGSB REG. NO 3049 — CGSB REG. NO —

DTR # E44833
REPORT REVIEWED BY:
NAME INITIALS

WHITE – CLIENT COPY CANARY – OFFICE COPY PINK – TECHNICIAN COPY GOLD – OFFICE COPY

PT Sept 2005